INSTALLATION INSTRUCTIONS

Model # 8271

READ AND SAVE THESE INSTRUCTIONS

WARNING! SHUT POWER OFF AT FUSE OR CIRCUIT BREAKER.

AVERTISSEMENT! COUPER LE COURANT AU NIVEAU DES FUSIBLES OU DU DISJONCTEUR.

PREPARING FOR INSTALLATION (Fig. 1)

1. Shut off power at the circuit breaker and remove the old fixture including the mounting hardware.
2. Carefully unpack your new fixture and lay out all the parts in a clear area. Take care not to misplace any small parts necessary for installation.
3. Thread the two studs (B) into the pre-drilled holes in the circular strap (C) spaced the same distance apart as the holes in the back plate (H). The length of studs (B) into circular strap (C) may be adjusted if necessary.
4. Attach the circular strap (C) using outlet box screws (F) to the outlet box (A), (Fig 1).

CONNECTING THE WIRES (Fig. 2)

5. Connect the electrical wires as shown in Fig.2. Making sure that all wire connectors are secured. If your outlet box has a ground wire (green or bare copper), connect the fixture's ground wire to it. Otherwise, connect the fixture's ground wire directly to the circular strap using the green screw (D) provided.

FINISHING THE INSTALLATION (Fig. 1)

6. Align back plate (H) onto studs (B) and secure with cap nuts (G) (Fig 1).
7. To prevent moisture from entering the outlet box (A) and causing a short, use clear silicone Sealant to outline the outside of fixture back plate (H) where it meets the wall leaving a space at bottom to allow moisture a means to escape (Fig. 4)
8. At this point, unscrew the screws (I), remove the cage (J) and install 1*100W/E26/A bulb (no bulb included) in accordance with the fixture specification **(DO NOT EXCEED THE MAXIMUM WATTAGE RATING) (NE PAS DEPASSER LA PUISSANCE NOMINALE MAXIMALE!)**
9. Re-install cage (J) to the top cover with screws (I)
10. This fixture is ETL Listed for Wet Location applications.

Your installation is now complete. Return power to the outlet box and test the fixture.

"CAUTION-RISK OF FIRE CONSULT A QUALIFIED ELECTRICIAN TO ENSURE CORRECT BRANCH CIRCUIT CONDUCTOR"

ATTENTION – RISQUE D'INCENDIE, CONSULTER UN ÉLECTRICIEN QUALIFIÉ POUR VOUS ASSURER QUE LES CONDUCTEURS DE LA DÉRIVATION SONT ADÉQUATS.

Fig. 1

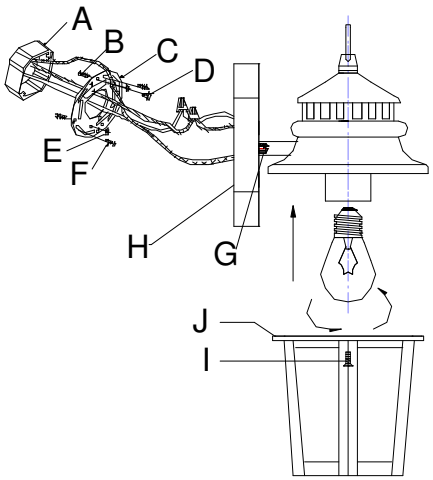

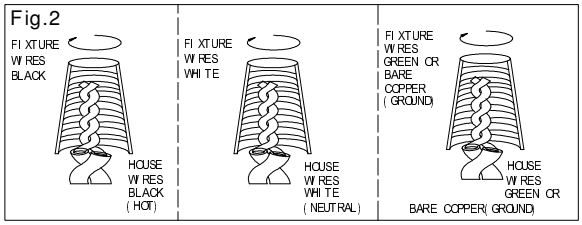

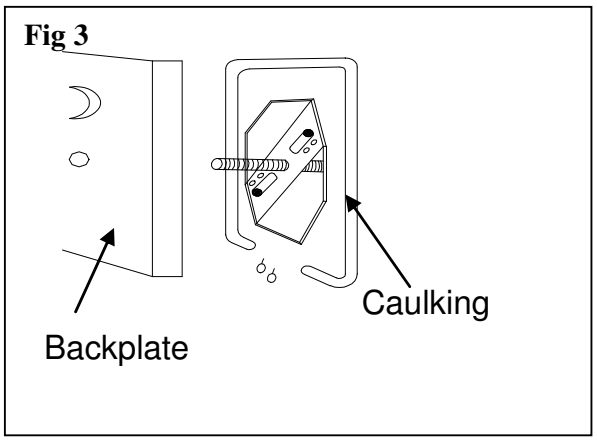

Intertek

american lighting association